AQUADEMY

OVERALL WIDTH AS SHOWN

700.0

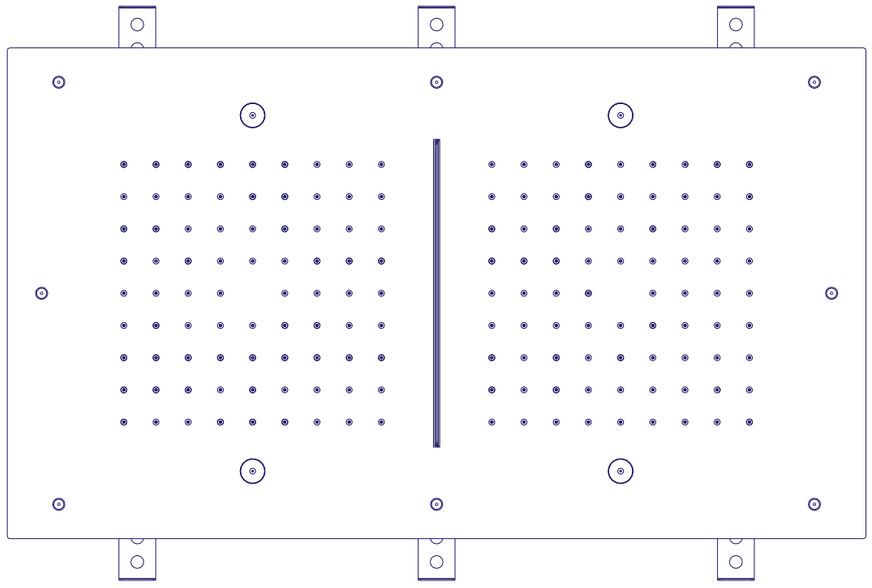

FRONT VIEW

Water outlet face

OVERALL DEPTH

56.3

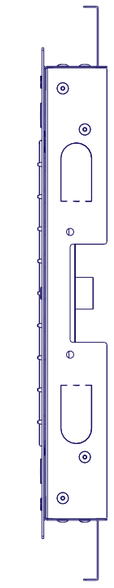

SIDE VIEW

Profile and rear components

OVERALL DIMENSIONS

700.0

468.0

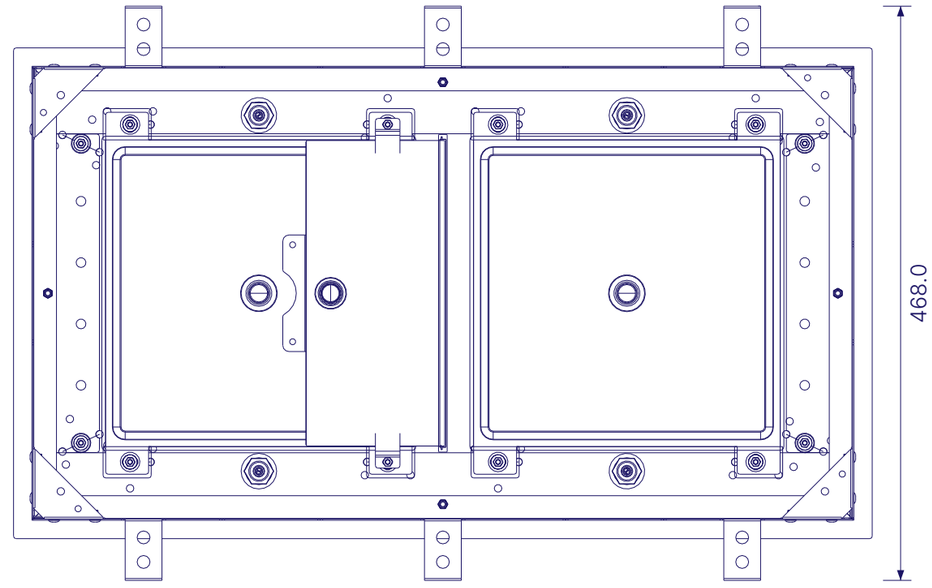

TOP VIEW

Frame and connections

DIMENSIONS IN mm Overall dimensions from CAD: 700.0 x 468.0 x 56.3 mm. Rounded to 0.1 mm.

Refer to the installation manual for ceiling cut-out, fixings, plumbing provisions and installation instructions.

YU 70 x 40

CEILING-RECESSED SHOWER HEAD / TECHNICAL DRAWING

CODE S132-00C

NOTES

Intercontact S.r.l. reserves the right to change product dimensions, technical specifications and construction details at any time without prior notice. Before installation, check the latest documentation and verify dimensions on the product. Do not scale from this drawing.

DATE OF ISSUE 28.10.2026	DRAWING CODE DT-S132-00C
SCALE / SIZE 1:5 / A3	REVISION / SHEET 07 / 1 of 1