AQUADEMY

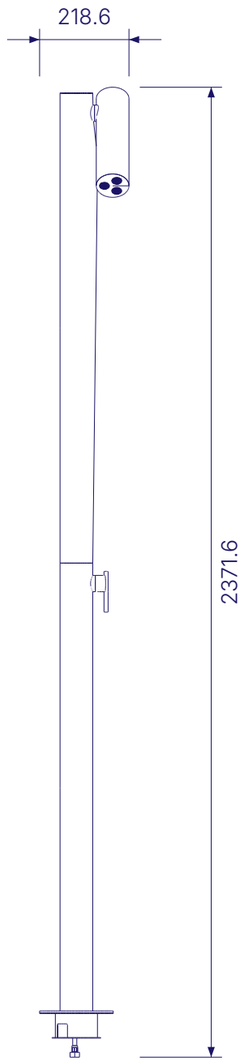

FRONT VIEW

Scale 1:15

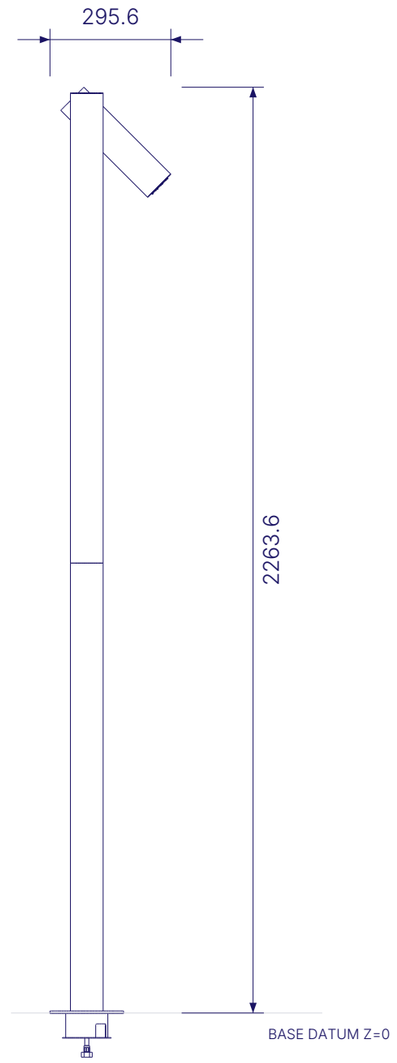

SIDE VIEW

Scale 1:15

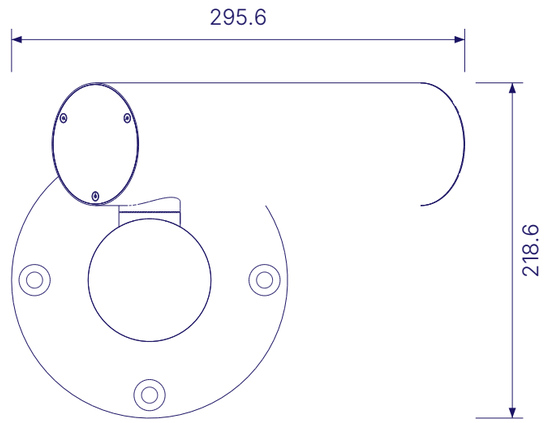

TOP VIEW

Scale 1:4

MAIN DIMENSIONS

Height above mounting base	2263.6 mm
Overall height incl. lower connections	2371.6 mm
Overall depth	295.6 mm
Overall width	218.6 mm
Mounting flange diameter	180 mm

DIMENSIONS IN mm Dimensions from original CAD, rounded to 0.1 mm. Lower connections are included in overall dimensions.

Check installation instructions for connections, anchoring and clearances. This drawing is not a drilling template.

YU OUTDOOR KOREA 1

OUTDOOR SHOWER COLUMN / TECHNICAL DRAWING

CODE C134-00X

NOTES

Intercontact S.r.l. reserves the right to change product dimensions, technical specifications and construction details at any time without prior notice. Before installation, check the latest documentation and verify dimensions on the product. Do not scale from this drawing.

DATE OF ISSUE 08.11.2026	DRAWING CODE DT-C134-00X
SCALE / SIZE 1:15; top 1:4 / A3	REVISION / SHEET 01 / 1 of 1